Basement Finishing Guide

Community Development Department
Building Inspections Division
5200 85th Avenue North / Brooklyn Park, MN 55443
Phone: (763) 488-6379 / Fax: (763) 493-8171
6/15 www.brooklynpark.org

This handout is a **guide** only and does not contain all of the requirements of the Minnesota State Building Code or city ordinances.

REQUIRED PERMITS:

1. A Building Permit is required. Separate permits for plumbing, heating, and electrical work are also required. Any fireplace will require a separate permit. Fire suppression permit will be required if the house is equipped with a fire suppression system. (Electrical permits are administered by the State of Minnesota Board of Electricity 651-284-5026).

PLAN REQUIREMENTS:

1. Building Permits require two sets of plans consisting of: a.) A plan view showing basement layout with dimensions and square footage and indicating use of each room, proposed walls, doors, windows, smoke detectors, sump baskets, furnace and water heaters, etc. b.) A cross section view showing ceiling height and projection.

GENERAL CODE REQUIREMENTS:

1. Bottom plate of proposed walls shall be treated.
2. Enclosed space under stairs must be entirely finished with ½" gypsum board.
3. **Smoke Alarms** are required on all levels of the house and in all sleeping rooms. Smoke alarms are to be hardwired and interconnected. Smoke alarms in existing areas are not required to be interconnected and hardwired if interior wall or ceiling finishes are not removed unless there is a crawl space or basement available to provide access to do so. Centrally locate smoke alarms in halls or in the area giving access to each bedroom.
4. **Carbon monoxide alarms** must be installed outside and not more than ten feet from each sleeping room on each floor.
5. Basements and each bedroom shall be provided with an escape window having:
   - A minimum net clear opening of 5.7 sq. ft. (821 sq. in.).
   - Exception- Grade floor windows: minimum net clear opening of 5 sq. ft (720 sq. in.).
   - A minimum clear opening height dimension of 24 inches.
   - A minimum clear opening width dimension of 20 inches.
   - A finished sill height of not more than 44 inches.
   - Window wells shall allow the window to be fully opened, with a minimum horizontal area of 9 square feet and a minimum horizontal projection of 36 inches.
   - A permanent ladder is required within the window well, if the distance from top of the well to the ground inside of the well is greater than 44 inches.
6. Each water closet shall be centered in a clear space of not less than 30 inches in width and have a clear space in front of the water closet of not less than 24 inches. The water closet is to be a 1.6 gallon flush.
7. Dissimilar materials must not be attached directly to each other, i.e. PVC must not be glued to ABS waste & vent.
8. An approved anti-scald (thermostatic or pressure balancing type) faucet must be installed in new shower or shower/bath installations.

9. Each bathroom shall be provided with an opening for ventilation or a powered exhaust fan venting to the outside. Exhaust ducts must be insulated (minimum R-3) for a distance of three feet from the outlet. Showers must be capable of encompassing a 30" circle measured at the height of the shower control handles. Bathtubs used as showers not included.
10. Furnaces shall have an unobstructed working space of not less than 30 inches in front of them and shall be provided with outside combustion air. Provide minimum clearance for furnace per manufacturer's specifications.
11. Water heaters and furnaces cannot be located in a bedroom or bathroom, but may be accessed through an adjoining bedroom or bathroom as long as combustion air is taken directly from outdoors and there is a self-closing, solid, weather-stripped door installed into the room. In warm air heating systems, an equal amount of supply air and return air shall be obtained.
12. Proper clearance from furnace flue shall be maintained (i.e. 1 inch clearance for a double wall type "B" vent and a 6 inch clearance for single wall flue pipe).
13. Provide access for water heater, water softener, water meter and other equipment to permit replacement or repair.
14. Do not locate electrical panel in closets and provide 3 feet of clear floor space for electrical panel.
15. Minimum headroom 6 '4". Beams may not project below the required ceiling height.
16. Habitable rooms shall be provided with a glazing area of not less than 8 percent of the floor area of such rooms. (IRC Sec.R303)
17. Habitable rooms shall have natural ventilation through openings with a minimal openable area of 4 percent of the floor area of such rooms. (IRC Sec.R303)
18. Gas lines with mechanical joints must not be in concealed spaces. (All gas work requires a licensed contractor.)
19. Fire blocking is required for concealed spaces, dropped ceilings, soffits and any penetrations in the top plate. Fire blocking shall not exceed intervals of 10 feet horizontally and at ceiling and floor levels (IRC Sec. R302.11)
20. Where there is open space both above and/or below the concealed space of a floor/ceiling assembly, draftstops shall be installed so that the area of the concealed space does not exceed 1000 square feet. (IRC Sec. R302.12)

REQUIRED INSPECTIONS:

1. **Rough in plumbing:** When drain, waste, plumbing venting and water lines are installed, before fixtures are set.
2. **Rough in heating:** When room supplies and returns are installed and any bath or dryer venting is installed.
3. **Rough in electrical:** Before wires are covered. Contact Peter Tokle, Electrical Inspector (763) 754-2983 for inspections, Mon.-Fri. 7:00-8:30 am.(Electrical inspections are done by the state)
4. **Framing:** After all duct work is in place and rough in electric and plumbing systems have been approved.
5. **Insulation:** After the framing inspection has been approved.(Fire blocking must be completed by this stage)
6. **Final electric, plumbing, and heating**. All have to be approved prior to the building final being done
7. **Final building**: after receiving all other finals.
8. **Fire suppression**: Required prior to framing. Only if the house has a fire suppression installed.

RECOMMENDATIONS:

1. The new Minnesota Energy Code does require basements and crawl spaces of existing homes to be insulated, unless your home was built under a permit which was issued prior to June 1, 2009.
2. Foam plastic insulation must be covered with ½ inch gypsum board, unless the foam plastic is approved for use without covering.
3. In some cases inspections can be grouped together, <u>but all the requirements of each system must be completed.</u> Example: the rough heating and plumbing may be done with framing if and only if the electrical rough inspection has been <u>completed</u> and <u>passed.</u>
4. Fire suppression plans and inspections may need to be performed by the fire department.
5. To prevent possible condensation stains on basement ceiling, insulate outside faucet water supply lines.

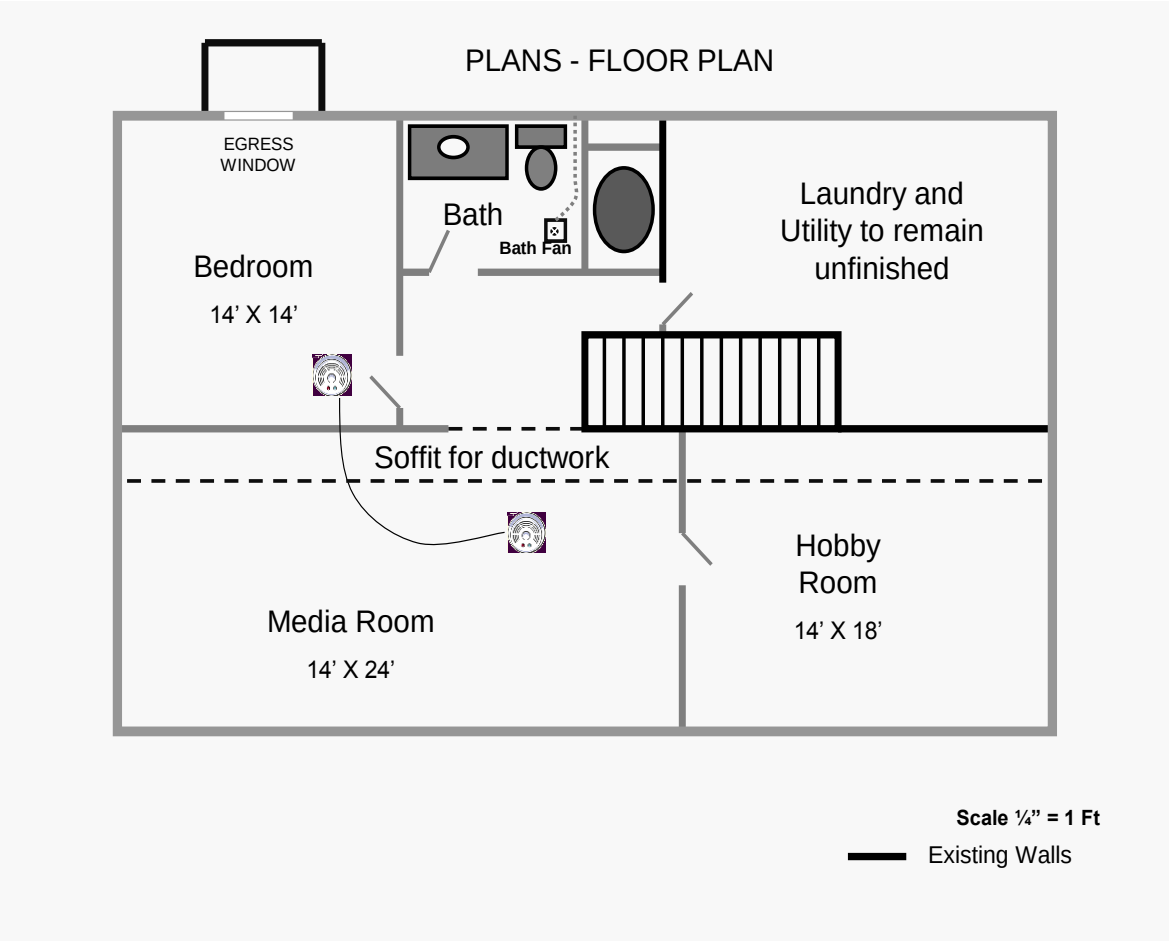

PLANS - CROSS SECTION

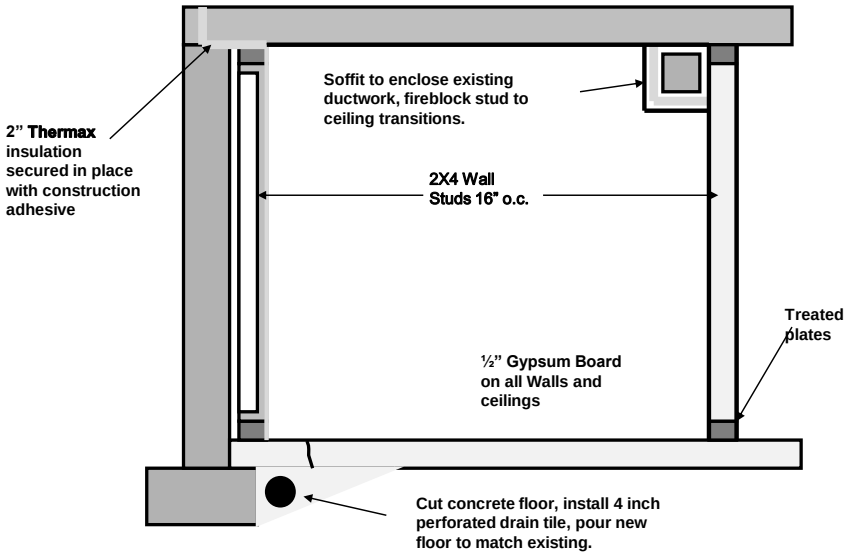

Typical Cross Section

FIREBLOCKING

Fire blocking, as the name implies, is intended to block the spread of fire from one ***concealed*** space to another. In the average home, the two areas where fire blocking is most likely going to be required are:

- At openings around wires, vents, pipes, and ducts where those items penetrate a ***top or bottom*** wall plate.
- At the interconnection between wall and ceiling spaces. Most likely this will happen at soffits and dropped ceilings.

There are a number of ways to comply with fire blocking requirements for wire, vent, pipe and duct penetrations.

1. There are caulks on the market for sealing the annular opening around wires, vents, pipes, and ducts. Some caulks are listed as "noncombustible". Others may also be "noncombustible" and "intumescent". Either product is acceptable. They should be installed in accordance with the manufacturer's instructions.
2. Un-faced fiberglass batts may be used as fire blocking provided that the batt is at least 16 inches in height measured vertically and fills the full width of the stud space. Insulation should be packed around the penetrating opening including the opening in the top or bottom plate. If the wire, pipe, vent or duct penetrates both the top and bottom wall plate, a 16-inch batt must be placed at both the top and bottom of the cavity, or the entire cavity may be filled.

Fire blocking the interconnection of wall to ceiling spaces can be more confusing. If there is a pathway for air to move from a stud space to a joist space, the path must be fire blocked. In those cases, the use of ½“ gypsum board, 2 inch nominal lumber, ¾ inch plywood or particleboard, or two thicknesses of 1 inch nominal lumber may be used. Fiberglass batts may also be used and are the most common way to fire block soffits at exterior walls.

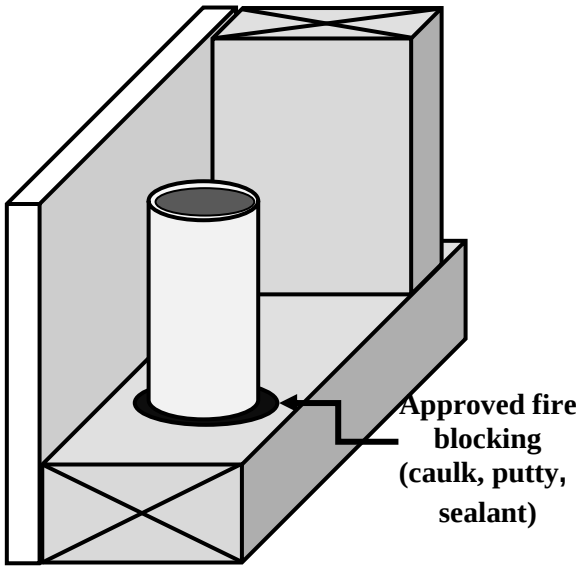

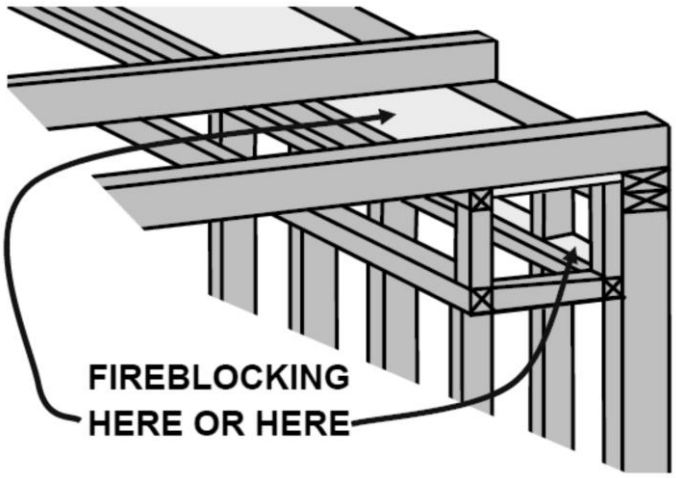

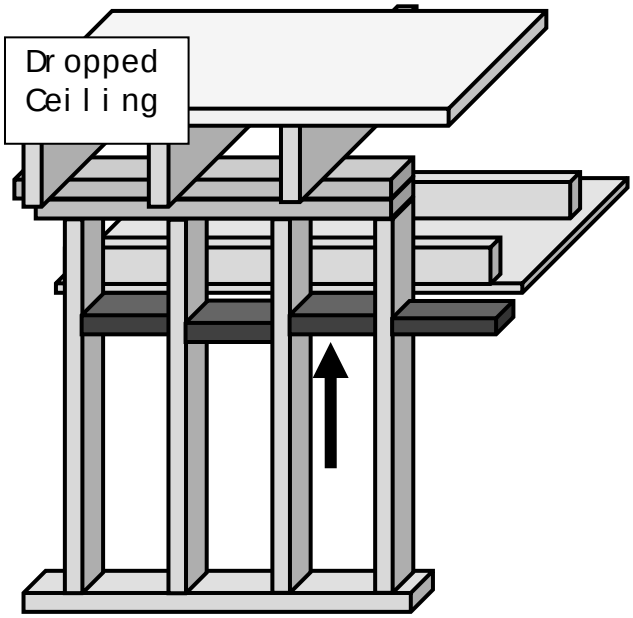

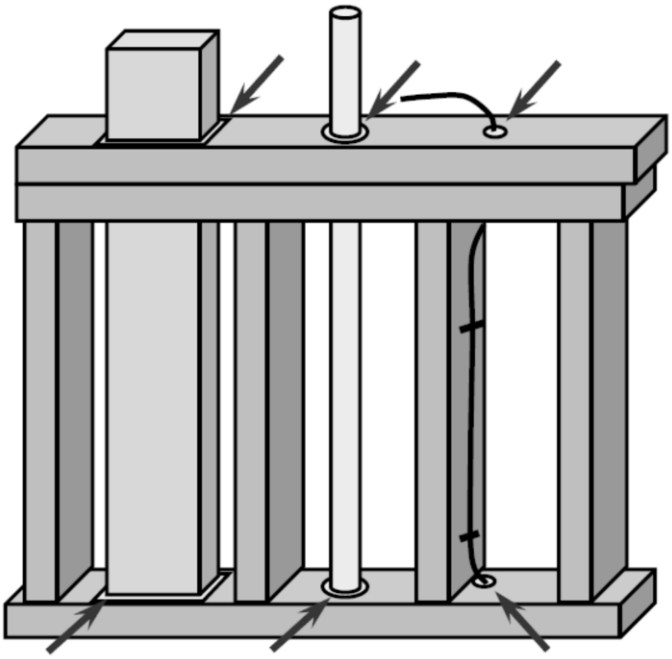

Fire blocking is typically inspected at the time of the insulation inspection.